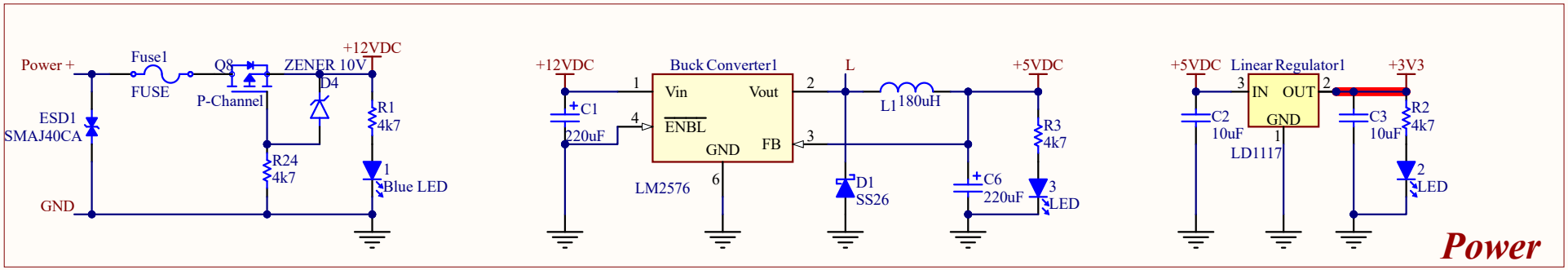

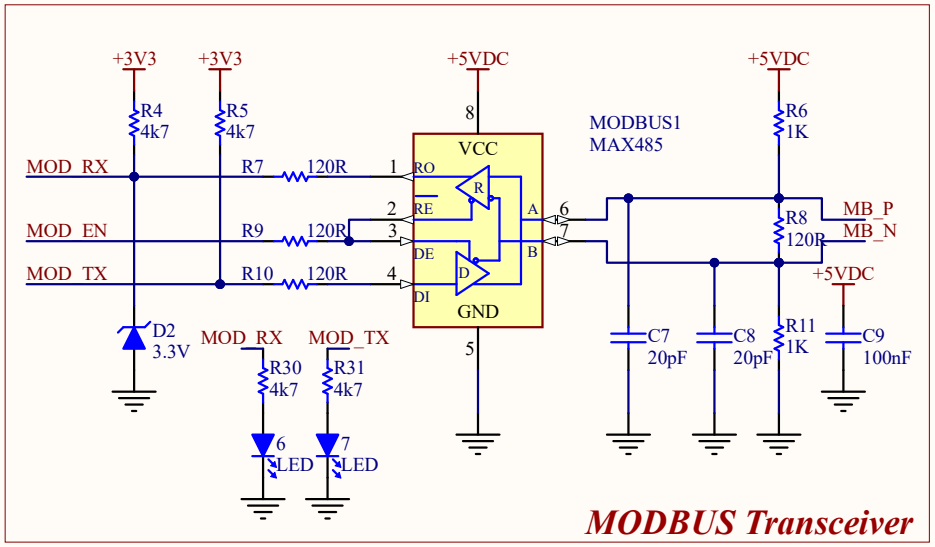

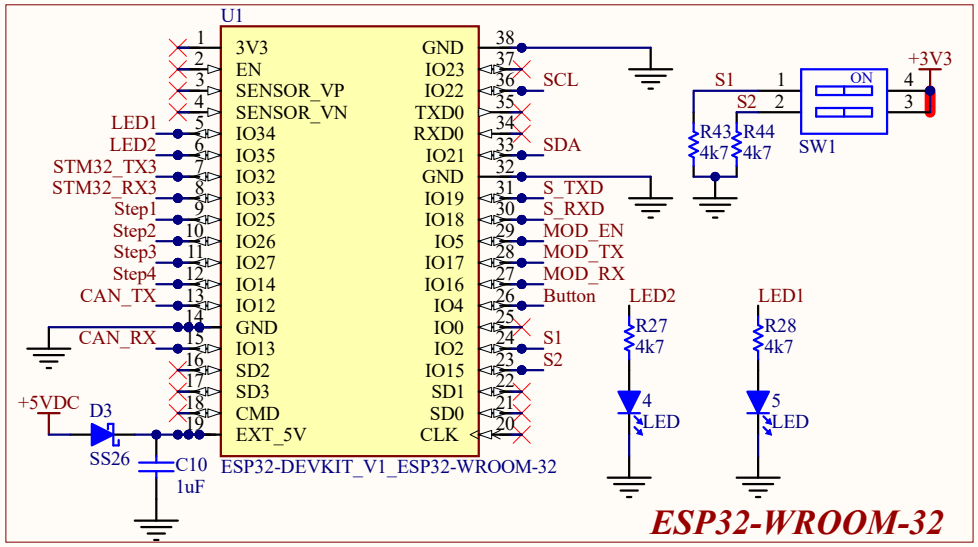

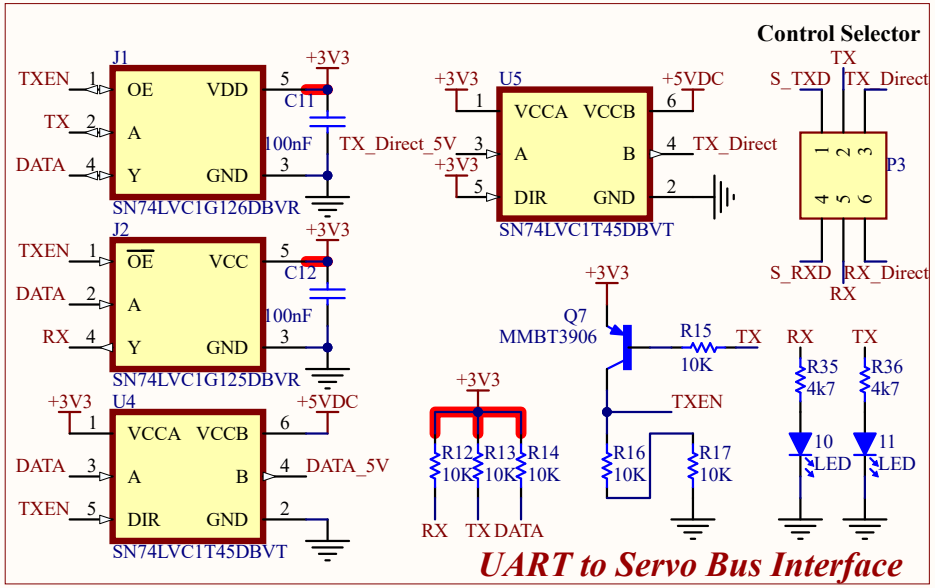

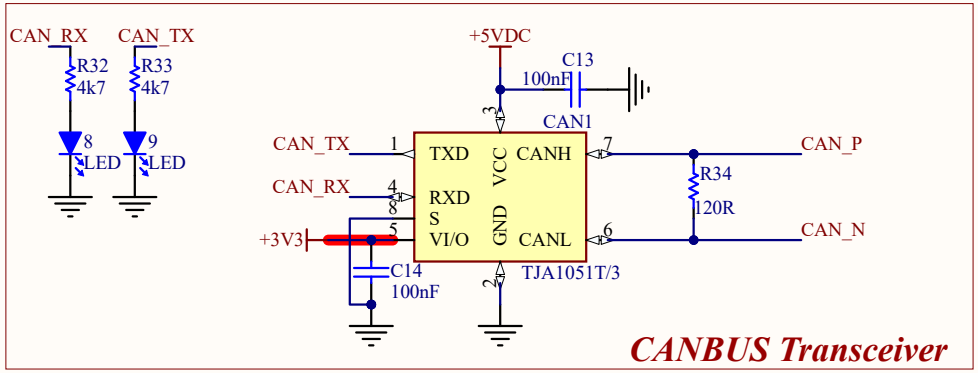

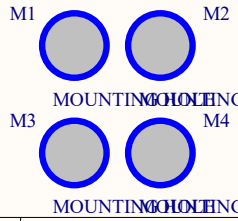

Title	ATech Laser Turret Controller	
Size: A	Number: ESP32 Wroom32 Schematic	Revision: V1.0
Date: 7/20/2025	Sheet of MCU and Power Schematic	
File: D:\My Files\..\Servo Bus Controller.SchDoc	Drawn By: Saaid JABR	

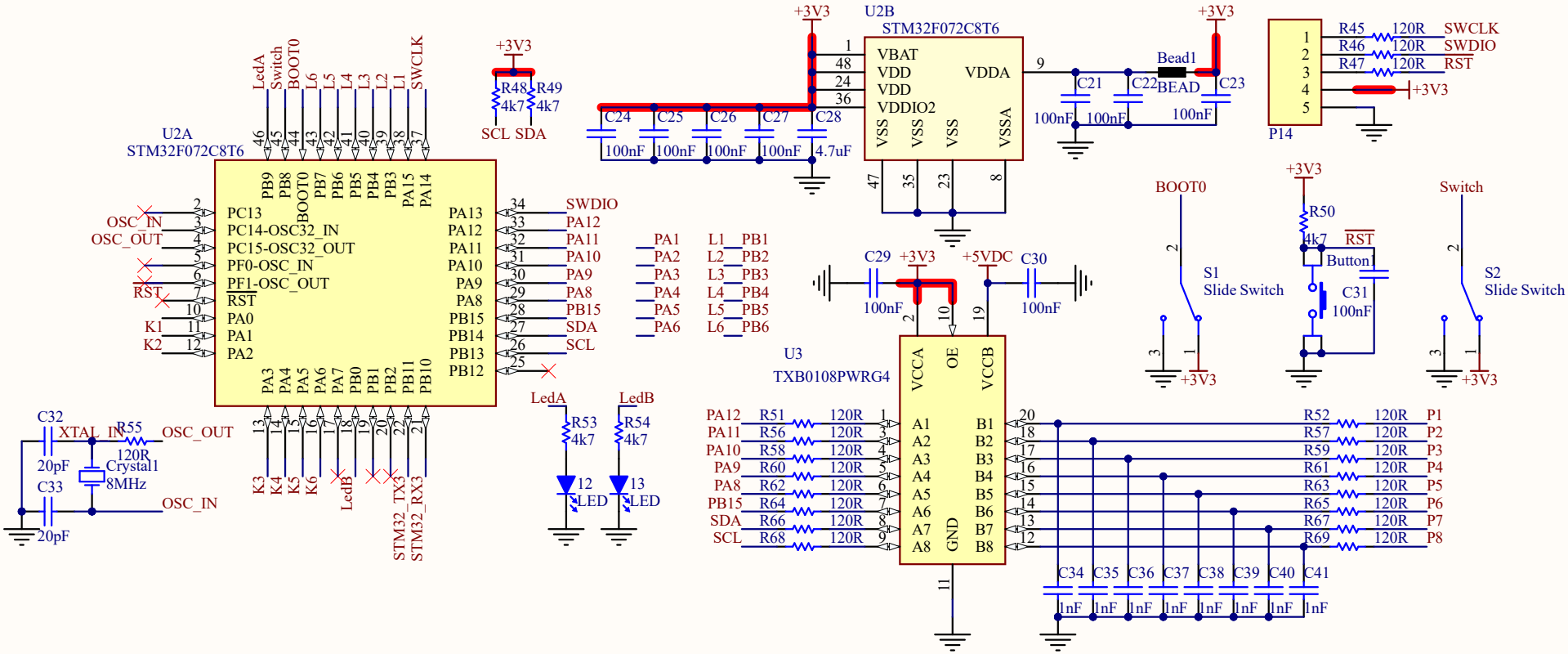

Title	***ATech Laser Turret Controller***		
Size A	Number		Revision ***V1.0***
Date:	7/20/2025	Sheet of	*Safety and Relays Schematic*
File:	D:\My Files\..\STM32 Control.SchDoc	Drawn By:	*Saaid JABR*

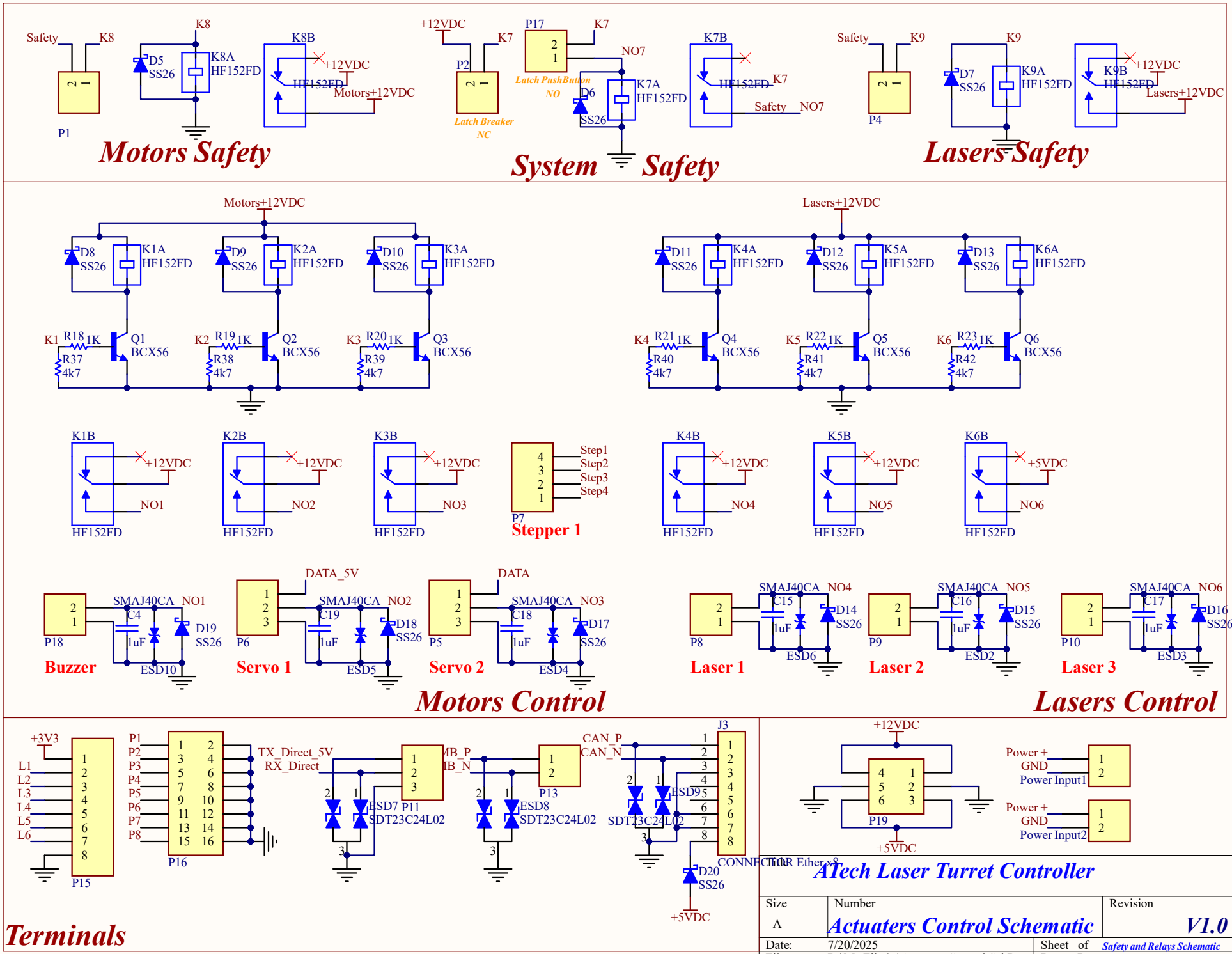
Motors Safety
System Safety
Lasers Safety
Motors Control
Lasers Control
Terminals
Safety
K8
K8A
HF152FD
K8B
+12VDC
Motors+12VDC
D5
SS26
P1
+12VDC
K7
P2
Latch Breaker
NC
P17
K7
NO7
Latch PushButton
NO
D6
SS26
K7A
HF152FD
K7B
HF152FD
K7
Safety
NO7
Safety
K9
P4
K9
D7
SS26
K9A
HF152FD
K9B
HF152FD
+12VDC
Lasers+12VDC
Motors+12VDC
D8
SS26
K1A
HF152FD
D9
SS26
K2A
HF152FD
D10
SS26
K3A
HF152FD
K1
R18
1K
Q1
BCX56
R37
4k7
K2
R19
1K
Q2
BCX56
R38
4k7
K3
R20
1K
Q3
BCX56
R39
4k7
Lasers+12VDC
D11
SS26
K4A
HF152FD
D12
SS26
K5A
HF152FD
D13
SS26
K6A
HF152FD
K4
R21
1K
Q4
BCX56
R40
4k7
K5
R22
1K
Q5
BCX56
R41
4k7
K6
R23
1K
Q6
BCX56
R42
4k7
K1B
+12VDC
NO1
HF152FD
K2B
+12VDC
NO2
HF152FD
K3B
+12VDC
NO3
HF152FD
Step1
Step2
Step3
Step4
P7
Stepper 1
K4B
+12VDC
NO4
HF152FD
K5B
+12VDC
NO5
HF152FD
K6B
+5VDC
NO6
HF152FD
P18
SMAJ40CA
NO1
C4
1uF
D19
SS26
ESD10
Buzzer
P6
DATA_5V
SMAJ40CA
NO2
C19
1uF
D18
SS26
ESD5
Servo 1
P5
DATA
SMAJ40CA
NO3
C18
1uF
D17
SS26
ESD4
Servo 2
P8
SMAJ40CA
NO4
C15
1uF
D14
SS26
ESD6
Laser 1
P9
SMAJ40CA
NO5
C16
1uF
D15
SS26
ESD2
Laser 2
P10
SMAJ40CA
NO6
C17
1uF
D16
SS26
ESD3
Laser 3
+3V3
L1
L2
L3
L4
L5
L6
P15
P1
P2
P3
P4
P5
P6
P7
P8
P16
TX_Direct_5V
RX_Direct
ESD7
P11
SDT23C24L02
MB_P
MB_N
ESD8
SDT23C24L02
P13
CAN_P
CAN_N
ESD9
SDT23C24L02
J3
CONNECTOR Ether x8
D20
SS26
+5VDC
+12VDC
P19
+5VDC
Power +
GND
Power Input1
Power +
GND
Power Input2
ATech Laser Turret Controller
Size
A
Number
Actuaters Control Schematic
Revision
V1.0
Date:
7/20/2025
Sheet of
Safety and Relays Schematic
File:
D:\My Files\..\Actuator Control.SchDoc
Drawn By:
Saaid JABR